Versatile and Durable

Axial Piston Pumps and Motors

LIEBHERR

Axial piston pumps and motors by Liebherr

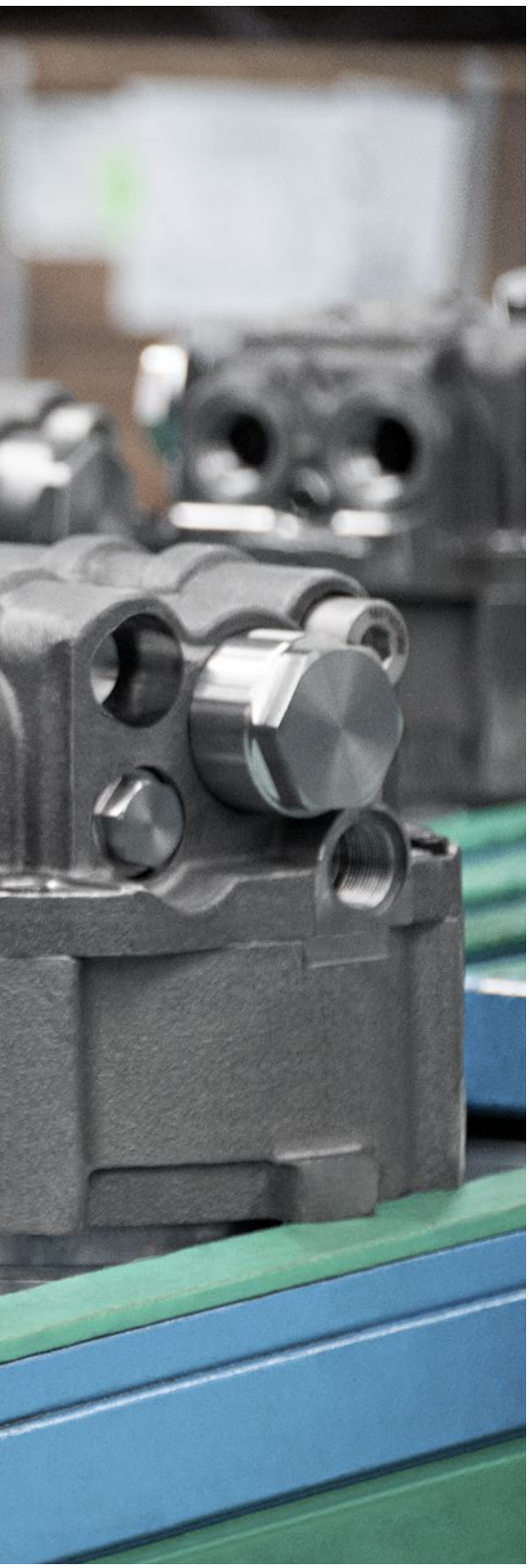

At the Bulle location in Switzerland, Liebherr has been manufacturing axial piston pumps and motors in swashplate design for more than 40 years. Development and production of the components is supported by decades of experience and state-of-the-art technologies. In order to meet the requirements of every customer optimally, the components can be put together flexibly and individually thanks to modular systems. Furthermore, the product range offers various application-specific options.

Advantages

Key factors for success such as durability and availability lead to high cost-effectiveness and efficiency of the Liebherr hydraulic pumps and motors. In the continuous operation required, the robust pumps and motors have already proven their value tens of thousands of times. Thanks to the use of highly rigid materials and a fatigue-endurable design for high pressure ranges the hydraulic components from Liebherr meet the stringent quality requirements for a wide range of mobile and stationary applications.

State-of-the-art development methods
Designed to specific requirements for reliable components

Wide product range
Maximum flexibility and modularity

Manufacturing know-how
Ideal availability for each application

Application know-how
Co-ordinated integration into the customer machine

State-of-the-art development methods

The foundation for the quality and performance of Liebherr hydraulic components is laid right at the point of product development. The combination of proven design features and innovative ideas leads to products with a long service life. The use of modern development and simulation software also contributes to the optimal design of the components.

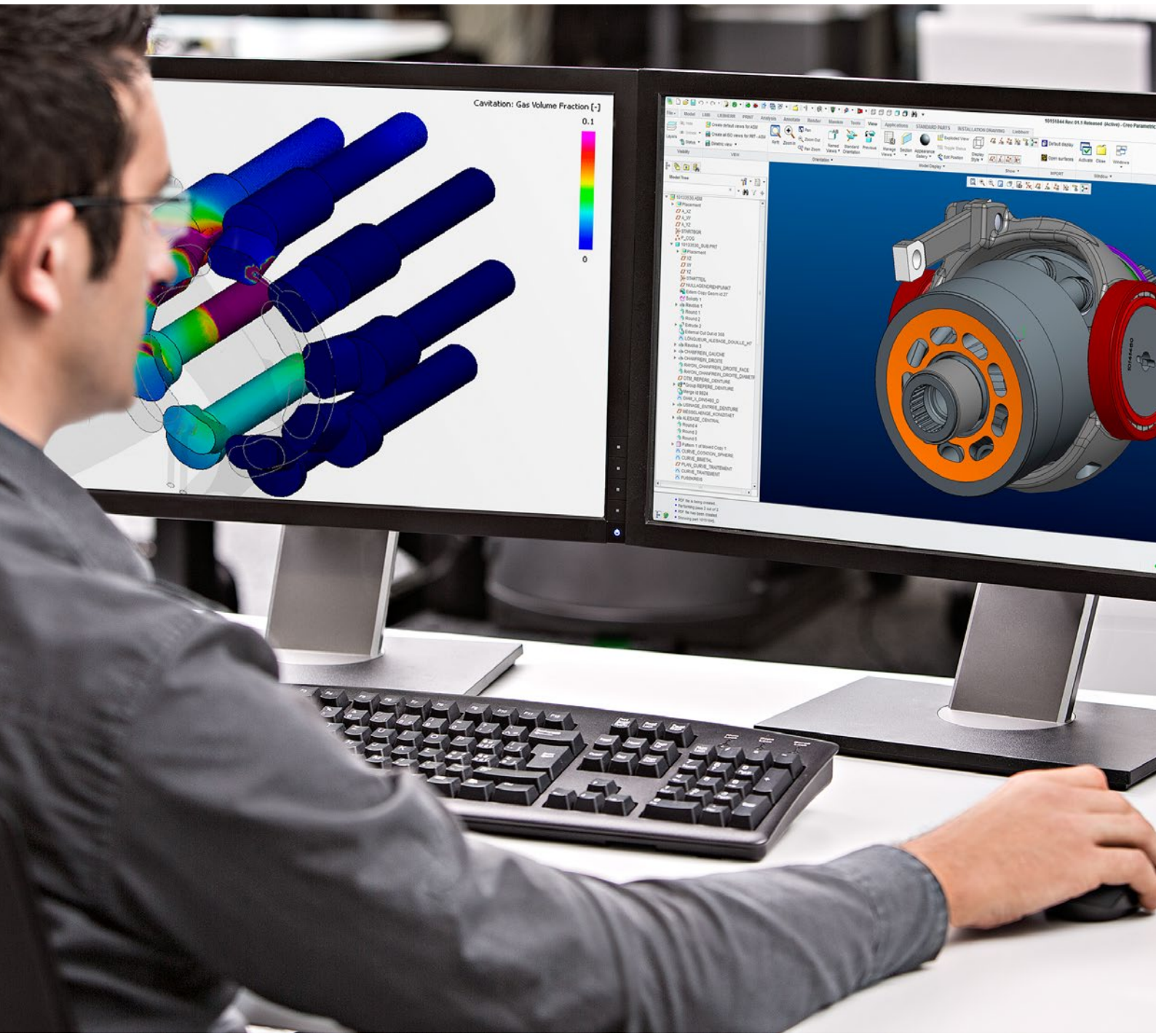

Designed to specific requirements for reliable components

Optimised efficiency and high power density
The axial piston units from Liebherr offer a swivel angle of up to 22 degrees. A higher swivel angle increases the conversion range and the efficiency of the pumps and motors. Furthermore, the compact rotary group and the high pressure level up to 450 bar rated pressure contribute to the high power density.

Optimised flow
Thanks to the use of modern flow simulation software (CFD), various simulations and measurements, pressure losses in the channelling are minimised and the flow characteristics improved. An optimal design of control plate and actuation geometry, configured to the operating range, reduces pressure pulsations.

Good vibration characteristics
With the Finite Element Method (FEM), load distribution within the components can be determined and areas that are subjected to particularly high loads can be identified. It is also possible to calculate the vibration characteristics of a pump or a motor and use the results to optimise the shape and structure of the housing. The increased stiffness of the housing has a positive effect on noise emissions. Vibrations are minimised and material fatigue is kept as low as possible.

System expertise for drivetrains
Hydraulic pumps from Liebherr are matched precisely to the diesel engine. To achieve high efficiency overall and to optimise the system, the drive groups of diesel engine and pumps are jointly tested on the test benches.

FEM analysis
Using the finite element method, perfect stiffness, optimal distribution of stress, ideal material coverage and improved geometry can be achieved. An analysis is performed on the cylinders, for example.

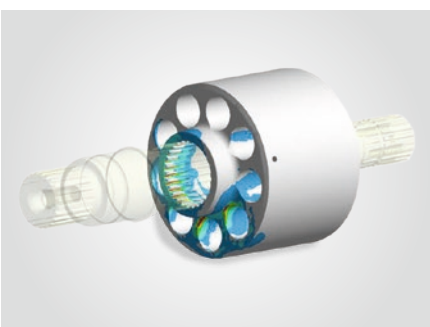

CFD simulation
Flow simulations are used to minimise pressure losses and optimise the flow in the axial piston unit.

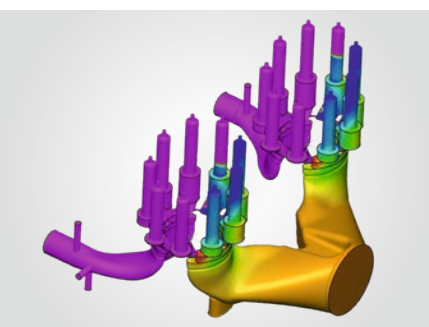

Acoustic test bench
Noise measurements are performed in a sound-insulated chamber. The high-quality measuring technology makes it possible to record component vibrations in various types of media (air-borne, water-borne, structure-borne) and highlights optimisation potential.

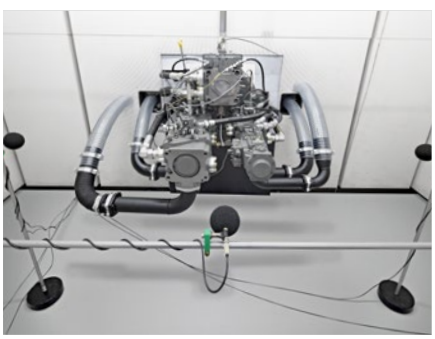

Manufacturing know-how

Liebherr has always attached great importance to a high level of vertical integration in the group of companies. This also applies to the components division. As such, many parts that are decisive for the quality and performance are produced for the axial piston units inhouse at the Bulle site in Switzerland. To ensure a consistently high level of quality and reliability of the high precision hydraulic components, Liebherr constantly improves all production processes and continually invests in the most advanced manufacturing facilities.

Ideal availability for each application

Function test for each component
Modern quality assurance measures and state-of-the-art measuring equipment ensure early detection of faults during the entire production and assembly process, thereby following a zero defect strategy. Without exception, every axial piston unit is subjected to a functional test before delivery during which, among other things, the torque and efficiency are checked. Only absolutely flawless components leave the factory.

Continuous quality assurance
To ensure quality, Liebherr uses an up-to-date computer-assisted quality management system (CAQ system) that is implemented as early as the product creation process and covers the entire product life cycle. Statistical assessments, FMEA (Failure Mode and Effects Analysis) and CIP (Continual Improvement Processes, lean management, and the 8D method) are examples of a consistent process philosophy.

Highest quality standards
The quality assurance for axial piston pumps and motors at the Bulle site is certified according to DIN EN ISO 9001/2015 and complies with VDA standards (reliability control loop).

3D measuring machines
The measurement of individual parts and assembled components is carried out using modern, computer-assisted test equipment.

Material selection
Grinding patterns, such as the one of the compound layer of a slipper seen below serve not only to confirm the material selection but also to verify the manufacturing process.

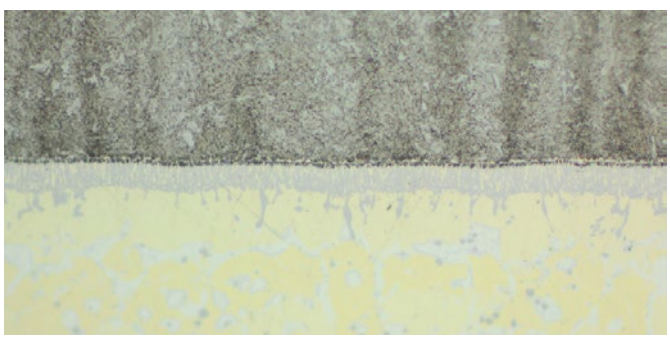

Application know-how

Due to the diverse range of machines and applications in the group's product portfolio, Liebherr has an extensive application experience, which is used to good effect in new and further developments. The results for the customer are optimally matched components with a range of integrated functions, optimal use of installation space and a high power density of the units.

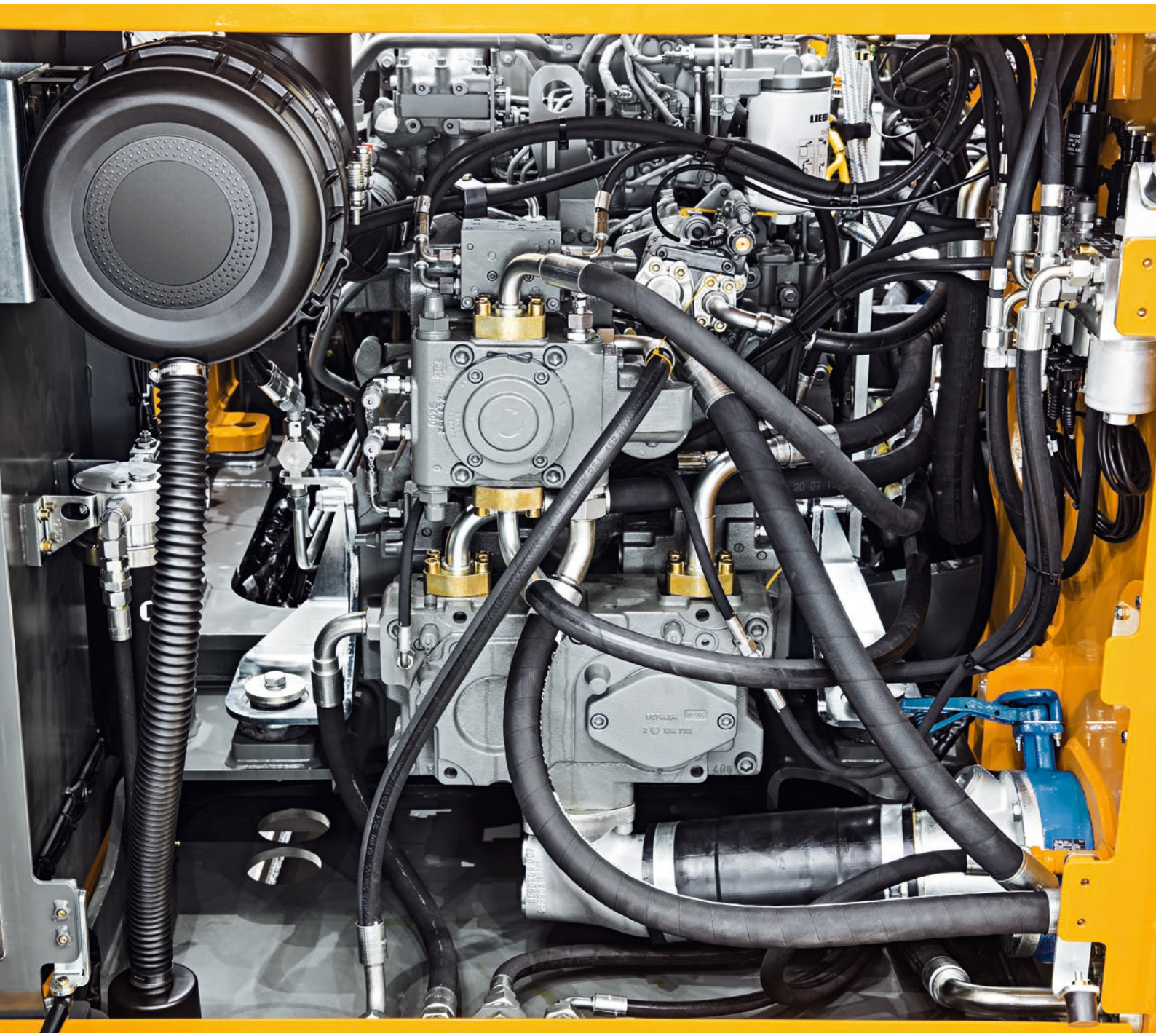

Co-ordinated integration in the customer machine

Integrated functions
Thanks to optimal harmonisation between splitter box, hydraulic pumps and valve technology as well as ideal adaptation of hydraulic motors and drives, there is an increase in performances, in operating comfort and a space saving integration of components possible. Travel motors for example use an integrated brake valve, a holding brake in combination with an adequate control and can be installed as plug-in motors.

Compact installation dimensions
To achieve a better use of the installation space, several functions can be integrated into one unit. The DPVP hydraulic double pump, for example, combines two rotary groups with a gearbox, thereby making a very short installation length possible. The ideal transmission ratio of the gearbox, which is driven by a separate oil circuit, allows high speeds to be achieved. Overall, the component brings maximum efficiency with minimum installation space and high flexibility.

High power density
The DMVA double motor comprises two individually controllable rotary groups in a back-to-back arrangement whose power add up. Two small rotary groups allow higher speed than a single motor of equivalent size. The inverse piston technology with an angle of 22 degrees offers high efficiency and wide conversion range.

Close cooperation with the customer
The sales and application specialists of Liebherr provide individual consultation. For customised developments and adaptations, they offer support to the customer right through to the integration of components into the machine.

Use at lowest and highest temperatures
Axial piston pumps and motors from Liebherr are suitable for use under toughest environmental conditions. To guarantee perfect reliability, cold cells are available at the Bulle location for testing the components under low-temperature conditions.

Wide product range

All hydraulic pumps and motors from Liebherr are developed in swashplate design. The product portfolio comprises pumps and motors both for open as well as closed hydraulic circuits. The pumps are designed as single, double or parallel pumps. The motors are available as single or double motors. A modular concept for controls, through-drive and mounting flanges creates flexibility and versatility in use.

Maximum flexibility and modularity

Controls
Each nominal size can be equipped with a variety of controls, such as electric-proportional, pressure cut-off, load sensing, speed-dependent or torque controls. Safety valves in poppet valve design can cut-off the control pressure and centre the axial piston unit in this way.

Standardised mounting flanges
The various mounting flanges in standard sizes that comply with SAE or ISO simplify integration of the components into the machine. Furthermore, they enable a flexible combination of hydraulic pumps and splitter boxes or hydraulic motors and gearboxes.

Through-drive modular system
The modular system of through-drives is facilitated by a common drive design, standard flanges and coupling sleeves. In this way, it is easy to connect a hydraulic pump to other units, it can even be bigger than the one in front.

Through-drive modular system
For the through-drive option of up to 130 % output, a wide range of flanges and adapters are available with varying diameters.

Control modules
All model sizes can be equipped optionally with a variety of controls which ensure the most precise operation of the unit in each application.

Product overview hydraulic pumps

DPVG

variable displacement, closed circuit, nominal pressure 450 bar, maximum pressure 500 bar

Nominal size		108	140	165	280
Displacement	$V_{g\,max}$ [cm³]	107.7	140.2	167.8	283.4
Max. speed	at $V_{g\,max}$, n_{max} [rpm]	3,000	2,850	2,700	2,500
Volumetric flow	at n_{max}, $q_{v\,max}$ [l/min]	323	400	453	709
Drive power	Δp = 430 bar, P_{max} [kW]	232	287	325	508
Drive torque	Δp = 430 bar, T_{max} [Nm]	737	959	1,149	1,940
Available controls		EL, EL-DA, ELS-DA, TCE, TCH, ELS, DS, DS-DA			

DPVD

variable displacement, open circuit, nominal pressure 400 bar, maximum pressure 450 bar (all data for each rotary group)

Nominal size		108	165
Displacement	$V_{g\,max}$ [cm³]	107.7	167.8
Max. speed	at $V_{g\,max}$, n_{max} [rpm]	2,200	2,100
Volumetric flow	at n_{max}, $q_{v\,max}$ [l/min]	237	352
Drive power	Δp = 400 bar, P_{max} [kW]	158	235
Drive torque	Δp = 400 bar, T_{max} [Nm]	686	1,068
Available controls		EL-DA, EL-LS	

DPVP

variable displacement, open circuit, nominal pressure 400 bar, maximum pressure 450 bar (all data for each rotary group)

Nominal size		108	108 impeller	165	165 impeller
Displacement	$V_{g\,max}$ [cm³]	107.7	107.7	167.8	167.8
Max. speed	at $V_{g\,max}$, n_{max} [rpm]	2,300	2,800	2,100	2,600
Volumetric flow	at n_{max}, $q_{v\,max}$ [l/min]	248	302	352	436
Drive power	Δp = 400 bar, P_{max} [kW]	165	201	235	291
Drive torque	Δp = 400 bar, T_{max} [Nm]	686	686	1,068	1,068
Available controls		EL-DA, LR-LS, LR-SD-DA, EL-LS, DA, SL-SD, LS-DA, EHC0, EHC1			

DPVG

DPVD

DPVP

DPVO

variable displacement, open circuit, nominal pressure 400 bar, maximum pressure 450 bar

Nominal size		108	140	165	215	215 impeller
Displacement	$V_{g\,max}$ [cm³]	107.7	140.2	167.8	216.6	216.6
Max. speed	at $V_{g\,max}$, n_{max} [rpm]	2,100	2,100	2,100	2,000	2,600
Volumetric flow	at n_{max}, $q_{v\,max}$ [l/min]	226	294	352	433	563
Drive power	Δp = 400 bar, P_{max} [kW]	151	196	235	289	375
Drive torque	Δp = 400 bar, T_{max} [Nm]	685	892	1,067	1,378	1,378
Max. through drive torque	[Nm]	1,265	1,830	1,950	1,810	2,200
Available controls		LU, EL-DA, EL-LS, LR-LS, LR-SD-DA, LS-DA				

LH30VO

variable displacement, open circuit, nominal pressure 280 bar, maximum pressure 320 bar

Nominal size		28	45	85
Displacement	$V_{g\,max}$ [cm³]	28.7	46.5	86.1
Max. speed	at $V_{g\,max}$, n_{max} [rpm]	3,300	3,000	2,400
Volumetric flow	at n_{max}, $q_{v\,max}$ [l/min]	94.7	139.5	206.6
Drive power	Δp = 280 bar, P_{max} [kW]	44.2	65.1	96.4
Drive torque	Δp = 280 bar, T_{max} [Nm]	127.9	207.2	383.7
Max. through drive torque	[Nm]	158	300	532
Available controls		LS-DA, LS-DE, DF-DA, DE-DA, DA, DE, VE, VK, LR		

DPVO

LH30VO

Product overview hydraulic motors

DMVA

variable displacement, open and closed circuit, nominal pressure 450 bar, maximum pressure 500 bar

Nominal size		108	165	215	370
Displacement	$V_{g\,max}$ [cm³]	107.7	167.8	216.5	371.2
Max. speed	at $V_{g\,max}$ and $\Delta p = 430$ bar, n_{max} [rpm]	3,350	3,000	2,700	2,400
Max. speed	at $V_g/V_{g\,max} = 0{,}65$ and $\Delta p = 200$ bar, n_{max} [rpm]	5,125	4,590	4,100	3,000
Flow	at n_{max}, $q_{v\,max}$ [l/min]	361	503	584	891
Output power	$\Delta p = 430$ bar, P_{max} [kW]	259	361	419	638
Output torque	$\Delta p = 430$ bar, T_{max} [Nm]	737	1,149	1,481	2,538
Available controls		EL, EL-DA, SD, SD-DA, HD			

DMVA double motor

variable displacement, open and closed circuit, nominal pressure 450 bar, maximum pressure 500 bar

Nominal size		165-108	165-165	165-215	215-165
Displacement	$V_{g\,max}$ [cm³]	167.8 + 107.7	167.8 + 167.8	167.8 + 216.5	216.5 + 167.8
Max. speed	at $V_{g\,max}$ and $\Delta p = 430$ bar, n_{max} [rpm]	3,000	3,000	2,700	2,700
Max. speed	at $V_g/V_{g\,max} = 0{,}65$ and $\Delta p = 200$ bar, n_{max} [rpm]	4,500	4,500	4,100	4,100
Flow	at n_{max}, $q_{v\,max}$ [l/min]	827	1,007	1,038	1,038
Output power	$\Delta p = 430$ bar, P_{max} [kW]	593	722	744	744
Output torque	$\Delta p = 430$ bar, T_{max} [Nm]	1,885	2,297	2,631	2,631
Available controls		EL, EL-DA, SD, SD-DA			

DMVA

DMVA double motor

DMFA

fixed displacement, open and closed circuit, nominal pressure 400 bar, maximum pressure 450 bar

Nominal size		**355**
Displacement	$V_{g\,max}$ [cm³]	355.6
Max. speed	at $V_{g\,max}$ and Δp = 380 bar, n_{max} [U/min]	2,400
Flow	at n_{max}, $q_{v\,max}$ [l/min]	853
Output power	Δp = 380 bar, P_{max} [kW]	541
Output torque	Δp = 380 bar, T_{max} [Nm]	2,149

DMFA

Product overview hydraulic motors

CMVE

variable displacement, open and closed circuit, nominal pressure 380 bar, maximum pressure 400 bar

Nominal size		**85**	**108**	**135**	**165**
Displacement	$V_{g\,max}$ [cm³]	85.2	108	135.7	165.9
Max. speed	at $V_{g\,max}$ and $\Delta p = 360$ bar, n_{max} [rpm]	3,900	3,470	3,250	3,000
Max. speed	at $V_g/V_{g\,max} = 0{,}65$ and $\Delta p = 200$ bar, n_{max} [rpm]	5,000	4,500	4,550	4,200
Flow	at n_{max}, $q_{v\,max}$ [l/min]	332	375	441	498
Output power	$\Delta p = 360$ bar, P_{max} [kW]	199	225	265	299
Output torque	$\Delta p = 360$ bar, T_{max} [Nm]	488	619	778	951
Available controls		ZH, DA			

FMV

variable displacement, open circuit, nominal pressure 350 / 420* bar, maximum pressure 380 / 450* bar (*ns 75)

Nominal size		**75**	**100**	**140**	**165**	**250**
Displacement	$V_{g\,max}$ [cm³]	75	103.2	141.2	165.8	256.8
Max. speed	at $V_{g\,max}$ and $\Delta p = 330$ bar, n_{max} [rpm]	3,900	3,540	3,160	3,000	2,600
Max. speed	at $V_g/V_{g\,max} = 0{,}65$ and $\Delta p = 200$ bar, n_{max} [rpm]	5,460	4,950	4,420	4,200	3,640
Flow	at n_{max}, $q_{v\,max}$ [l/min]	293	365	446	497	668
Output power	$\Delta p = 330$ bar, P_{max} [kW]	161	201	245	274	367
Output torque	$\Delta p = 330$ bar, T_{max} [Nm]	394	542	742	871	1,349
Available controls		ZH				

CMVE

FMV

FMF

fixed displacement, open and closed circuit, nominal pressure 350* / 420 bar, maximum pressure 380* / 450 bar (*ns 25-32, 90-250)

Nominal size		**25**	**32**	**45**	**58**	**64**
Displacement	$V_{g\,max}$ [cm³]	25	31.8	45.6	58.3	64.3
Max. speed	at $V_{g\,max}$ and $\Delta p = 330$ bar, n_{max} [rpm]	5,180	5,180	4,620	4,110	4,110
Flow	at n_{max}, $q_{v\,max}$ [l/min]	130	165	211	240	264
Output power	$\Delta p = 330$ bar, P_{max} [kW]	71	91	116	132	145
Output torque	$\Delta p = 330$ bar, T_{max} [Nm]	131	167	240	306	338

Nominal size		**90**	**100**	**125**	**165**	**250**
Displacement	$V_{g\,max}$ [cm³]	90.7	103.2	125.6	165.9	256.8
Max. speed	at $V_{g\,max}$ and $\Delta p = 330$ bar, n_{max} [rpm]	3,670	3,540	3,290	3,000	2,606
Flow	at n_{max}, $q_{v\,max}$ [l/min]	333	365	413	498	669
Output power	$\Delta p = 330$ bar, P_{max} [kW]	183	201	227	274	368
Output torque	$\Delta p = 330$ bar, T_{max} [Nm]	477	542	660	872	1,349

FMF

Examples of use

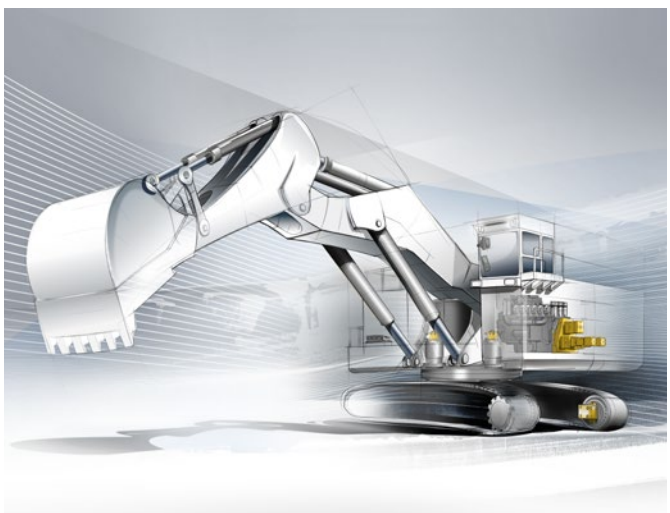

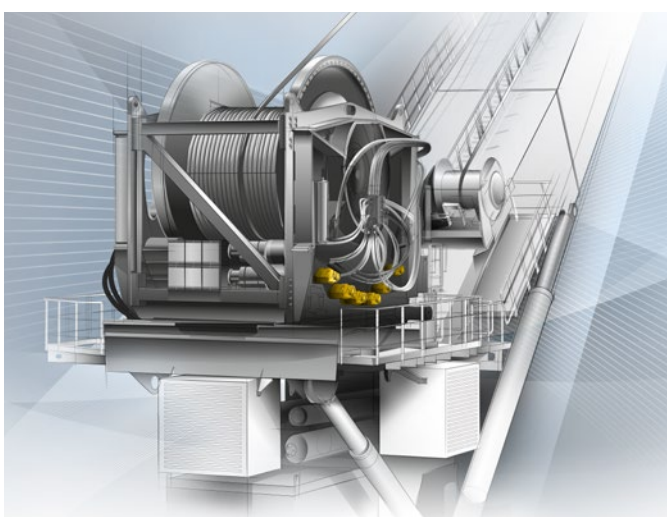

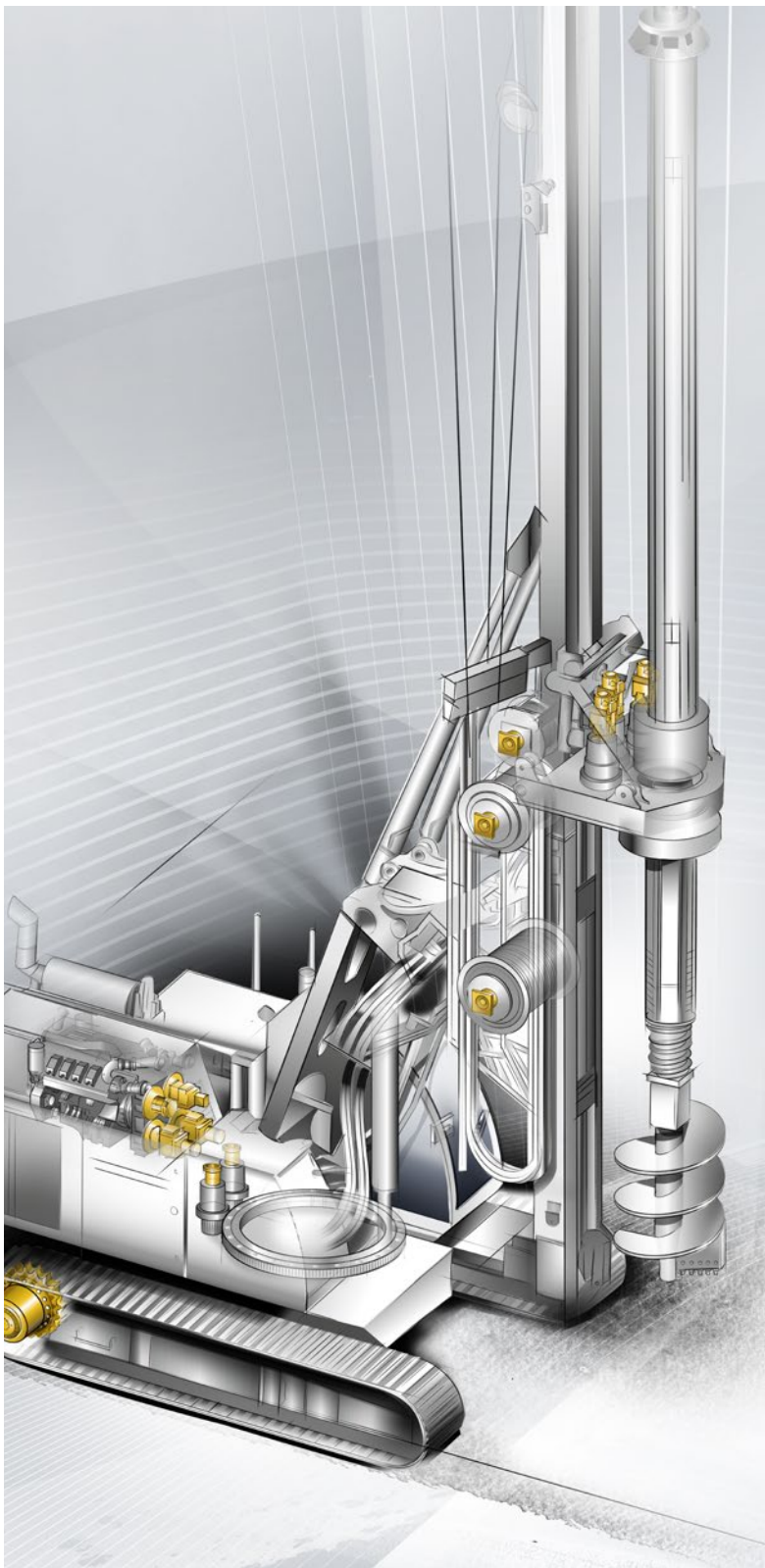

Agriculture and forestry
Whether it is for travel drives or for moving equipment attachments – the reliable and long lasting pumps and motors from Liebherr are suitable for many applications in agriculture and forestry. The axial piston pumps for the closed circuit are characterised by hydrostatic swash plate bearing and load-independent stability of the rotary group. This configuration makes the pumps particularly attractive for machines with a frequent and dynamic load change, e.g. a harvester. Even in the toughest of environmental conditions they convince with their high reliability and lifetime.

Maritime applications
The versatile Liebherr hydraulic pumps and motors have proven themselves onshore and offshore. Their advantages come to bear predominantly in crane applications. For the requisite durability in the maritime area, the components have a very sturdy design and a protection against corrosion.

Building construction and civil engineering
For earth moving equipment, mobile and crawler excavators, bulldozers and crawler loaders as well as for special civil engineering machines Liebherr provides axial piston pumps and motors, pilot control devices and valves for versatile functions. These functions include hydrostatic travel and swivelling drives. Axial piston pumps and motors are also used in hydrostatic travel and slewing drives in cranes. Furthermore, they are used to drive rope winches and cylinders.

Mining equipment
As for mining equipment, Liebherr develops and manufactures robust hydraulic components for working hydraulics, swivelling and travel drives as well as for fan drives. Along with the diesel engine and splitter box from Liebherr, the complete hydraulic drivetrain can be assembled. The units can withstand the high mechanical loads and rough environmental conditions which can be found in mining.

Special machinery
Due to the application-specific design, Liebherr axial piston pumps and motors are outstandingly suitable for use in special applications and special vehicles. Hydrostatic drives are, for example, used in pipeline equipment, straddle carriers and waste shredders.





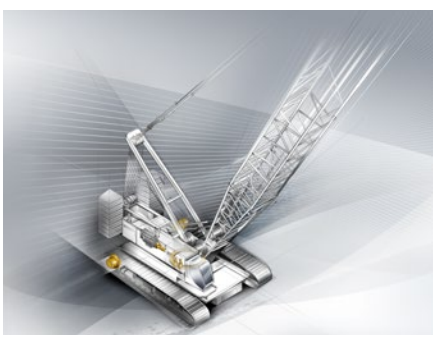


Liebherr Components

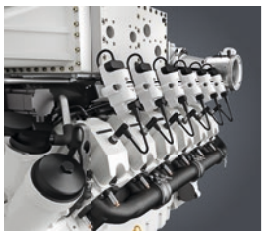
Gas engines


Diesel engines

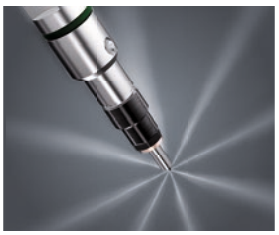
Fuel injection systems


Axial piston hydraulics

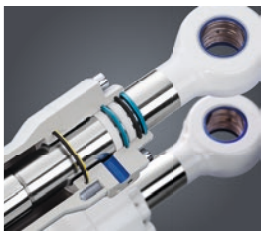
Hydraulic cylinders


Slewing bearings


Gearboxes and winches

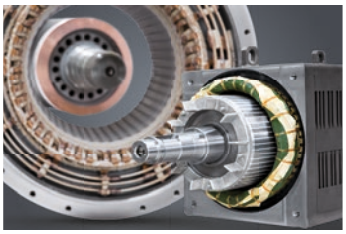
Electric machines

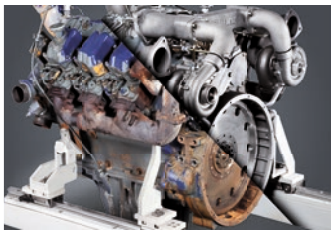
Remanufacturing


Human-machine interfaces and gateways

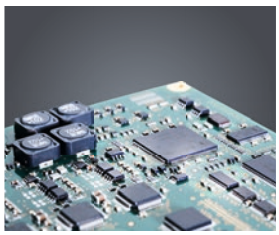
Control electronics and sensor technology


Power electronics


Control cabinets


Software

From A to Z – the components division of the Liebherr Group offers a broad range of solutions in the area of mechanical, hydraulic, electric and electronic drive system and control technology. The efficient components and systems are produced at a total of ten production sites around the world to the highest standards of quality. Central contact persons for all product lines are available to our customers at Liebherr-Components AG and the regional sales and distribution branches.

Liebherr is your partner for joint success: from the product idea to development, manufacture and commissioning right through to customer service solutions like remanufacturing.

components.liebherr.com

Printed in Switzerland by Albrecht Druck AG BK AxM-APM-PLB-10.19-0.15-en
Subject to technical modifications.

Liebherr-Components AG
Post box 222, CH-5415 Nussbaumen/AG
☎ +41 56 296 43 00
✉ components@liebherr.com

Liebherr USA, CO.
1465 Woodland Drive, Saline, MI 48176, USA
☎ +1 734 944 63 34
✉ components.usa@liebherr.com